MiraColt™

USER MANUAL

GENERATION 3 AND GENERATION 4



Chariot Innovations®

NOVEMBER 2026

CHARIOT INNOVATIONS INC.
1620 W. Loop 340 - Suite E, Woodway TX 76712
PO Box 1367 Waco TX 76703
Tel: +1 (254) 307-2547

Congratulations on acquiring your new MiraColt™ mechanical riding motion simulator by Chariot Innovations, Inc. To ensure you get the most out of your therapeutic motion simulator, and to operate it safely for many years, ***please take a few moments to review this essential guide before getting started***. From clinical rehabilitation to home-based care, we are thrilled to support your goals for improved mobility and wellness. Welcome to the Chariot Innovations community!.

Contents

About the MiraColt™ 1

Product Details: 2

Technical Specs: 3

Identify your MiraColt™ model 4

MiraColt™ Gen 4 parts and controls 5

MiraColt™ Gen 3 rear controls 6

Gen 4 handlebar 7

1. Adjust the angle 7
2. Adjust the height 7
3. If you remove the handlebar 7
4. Check before riding 8

Gen 3 handlebar height 8

Operating the MiraColt™ - Important Safety Information 9

- Assess each rider 9
- Keep people clear of moving parts 9
- Use the correct stop control 9
- Protect the unit and electrical system 9

Stop for abnormal behavior 10
Set-up and pre-use checks 11
1. Inspect the unit 11
2. Set the base securely 11
3. Check the controls and power connection 11
4. Prepare the rider 11
5. Complete the starting checks 11
6. Please Note 12
Controls and normal operation 13
Stopping and troubleshooting 14
Normal stop and shutdown 14
Emergency control 14
If something is wrong 14
Maintenance ,Care, Inspection and Service 15
Monthly external checks 15
Annual care and inspection 15
Videos and support 17
Operating overview 17
Power troubleshooting 17
Shutdown troubleshooting 17
Contact Chariot Innovations 17

About the MiraColt™

The MiraColt™ is a mechanical horse-riding simulator designed to recreate the rhythmic movement of a horse at a walk. Its design was inspired by the use of equine movement in hippotherapy and therapeutic riding.

A walking horse moves in several directions at once. The MiraColt™ seat recreates this coordinated movement by traveling forward and back, side to side, and up and down while also rotating around each of those three axes. These combined motions are known as **six degrees of freedom**.

The motion-capture graphs below compare the movement of the MiraColt™ (dotted lines) with the walking gait of live horses (solid lines). Each graph shows how one of the six motion components changes over the course of a stride.

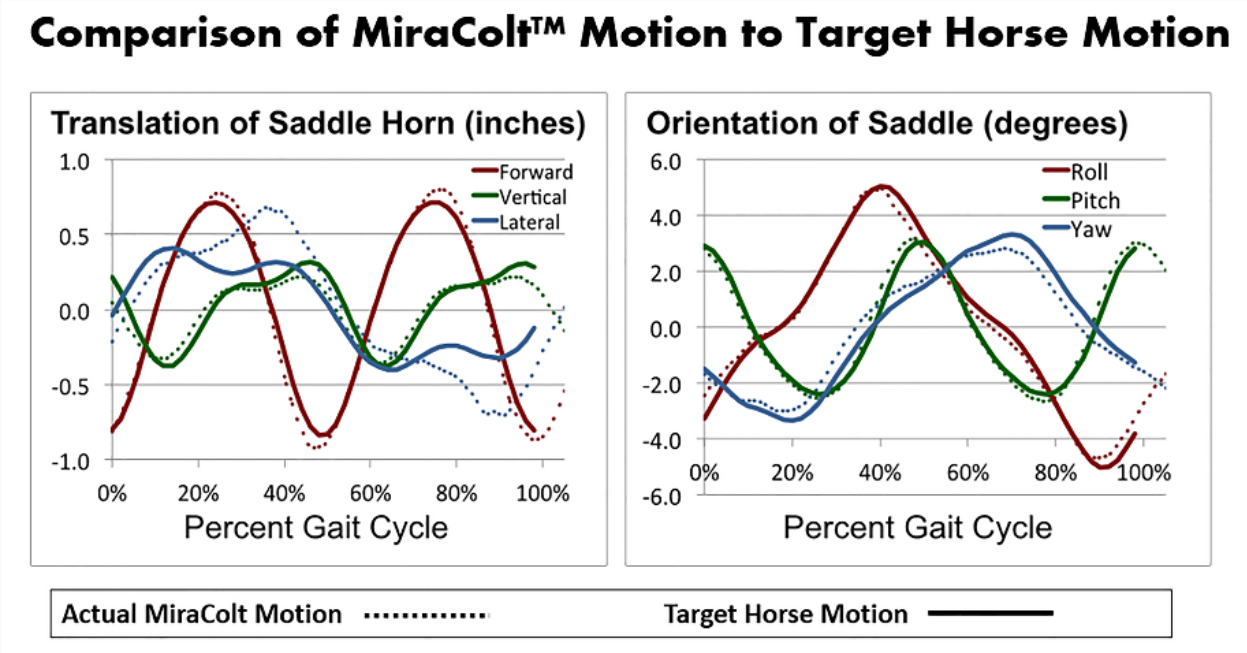

Product Details:

The MiraColt™ is registered with the United States FDA. The following are its registration details:

Registration #:	3013383022
Device:	Exerciser, Powered
Regulation Description:	Powered Exercise Equipment
Regulation Medical Specialty:	Physical Medicine
Product Code:	BXB
Device Class:	1
Submission Type:	510(K) Exempt
Regulation Number:	890.5380
Premarket Review:	Office of Neurological and Physical Medicine Devices (OHT5) Neuromodulation and Physical Medicine Devices (DHT5B)

Technical Specs:

Specification	Value and Notes
Electrical supply	US & Americas Version: 120 VAC, single phase, 10 A, 60 Hz; International Version: 220-240 VAC, single phase, 10 A, 60 Hz.
Operating environment	1-40 C (34-104 F); 95% humidity; no condensation; non-frozen.
Controller frequency	15-60 Hz Frequency
Recommended Operating frequency	20-60 Hz Frequency with optimum for most therapy 25 – 45 Hz
Dimensions	Generation 3 - 41 x 59 x 76 cm (16 x 23 x 30 in) Generation 4 - 43 x 66 x 76 cm (17 x 26 x 30 in) (Width span 71cm /28in including knobs and switches)
Unit weight	Generation 3: 75 kg (165 lb.). Generation 4: 68 kg (150 lb.)
Maximum rider weight	Rated for 250 lb. (113 kg).
Recommended break	A break after 30 minutes of use is advisable for both models, especially near the rider weight limit.

Identify your MiraColt™ model

This manual covers two model versions; the Generation 3 (Gen 3) and Generation 4 (Gen 4) models. Check your unit identification and configuration.

Gen 3	Gen 4
	
Example with Green Standard seat. Generation 3 has curved handlebar with height adjustment knob. It measures 41 x 59 x 76 cm (16 x 23 x 30 in	Example with Green standard seat. The Generation 4 features a longer chassis measured at 43 x 66 x 76 cm (17 x 26 x 30 in). It also has an adjustable handlebar.

Unit size, handlebar and emergency shutoff location are the main differences. See page 6 for the Gen 3 rear shutoff and page 5 for Gen 4 controls. Match the pictured handlebar adjustment points to the hardware fitted to your unit.

When requesting help, send the model and serial information plus a clear photograph of the relevant part. Do not identify the model solely from seat color.

MiraColt™ Gen 4 parts and controls



No.	Part	No.	Part
1	Handlebar and grips	6	Casters and wheel locks
2	Seat	7	Red emergency shutoff button
3	Seat latches	8	Handheld controller and cable
4	Protective mesh	9	Power connection area
5	Base frame and protective panels	10	Patent & Identification label

Numbers identify the parts in this photograph; they are not replacement part numbers. See Parts Manual for those details when contacting support.

MiraColt™ Gen 3 rear controls

The major difference between the Generation 3 and 4 parts and controls has to do with the rear design.



No.	Part
1	Fixed power cable entry
2	Rotary On/Off switch
3	Red emergency cutoff button

Gen 4 handlebar

The Gen 4 handlebar can be positioned forward or backward. Use the supplied tools to adjust its angle and height.

1. Adjust the angle	2. Adjust the height
	
Use the supplied **5 mm Allen key** in the recessed screw beneath the handlebar joint. Loosen the screw until the notched locking block clears the grooves. Set the angle, engage the block in the grooves and retighten the screw.	Use the supplied **7/16-inch-deep socket** to loosen the four acorn nuts until the shaft can move. Set the height and retighten the nuts to secure the shaft.

3. If you remove the handlebar

Loosen the four acorn nuts until you can lift the shaft out of the bracket. If you leave the handlebar off, tighten the nuts until the empty bracket is snug and does not rattle. Contact us if you need to remove the entire mounting bracket.

4. **Check before riding**

Check that the handlebar is secure before the rider mounts. Contact us if you have any questions about the tightening specifications and insertion limits for your unit.

Gen 3 handlebar height

Use the knob shown below to adjust the handlebar height on Gen 3.



Check that the handlebar is secure before the rider mounts. Contact us if you need adjustments or insertion limits for your unit.

Operating the MiraColt™ - Important Safety Information

Read these precautions before setup, riding, adjustment or inspection.

Assess each rider

The MiraColt™ generates complex, three-dimensional movement that may not be safe for every person. Consult a qualified medical professional for each rider before using the unit. Determine the positioning, activities and assistance appropriate to that person.

Keep people clear of moving parts

- Keep hands, clothing, jewelry, straps and objects away from the gap between the base and moving seat structure.
- Do not reach under the base during operation. The moving seat frame can come to rest on an obstruction.
- Do not plug in or operate the unit when panels or safety shields are missing.
- Do not ride in an unsafe or reckless manner.

Use the correct stop control

- Use the red **Stop/Reset** key on the **keypad** for normal stopping.
- The large red **emergency shutoff** is for **emergencies**, not routine stopping.
- Stop the motor with the keypad before turning the main power switch Off during normal shutdown.

Protect the unit and electrical system

- Use even, level ground and keep all four casters locked during riding.
- Do not operate in a wet environment.
- Do not operate in Reverse. Reverse mode should be disabled.
- Use only the green **Run** key, red **Stop/Reset** key and **speed dial**. Do not change other controller settings.
- Lift only from the bottom of the base frame. ***Do not lift by the seat, handlebar or protective panels.***

- Do Not Operate or plug in the unit when any panels or safety shields are missing.
- Do not attempt repairs before contacting Chariot Innovations.

Stop for abnormal behavior

If for whatever reason during the operation of MiraColt™ you hear a strange noise or observe unusual motion behavior, please power off the MiraColt and contact Chariot Innovations. Minor squeaks and creaks are normal, and to be expected.

Treat an immediate hazard as an emergency; do not dismiss a new or unexplained change.

Set-up and pre-use checks

Inspect the unit, clear the moving-seat area and prepare the rider before starting.

1. **Inspect the unit**

Look for any damaged, missing or loose parts. Check the seat, handlebar, accessories, protective mesh, panels, cords and controller cable. Do not use the unit if a part is damaged, unsecured or missing.

2. **Set the base securely**

- Place the unit on even, level ground. Lock all four casters in the required outward-angled position. Make sure no obstacles, straps or other objects interfere with seat motion.

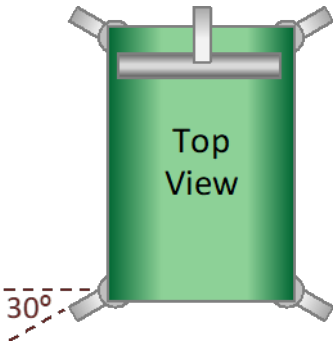

- DO NOT tilt the MiraColt Unit more than 20 degrees or so.

3. **Check the controls and power connection**

Before connecting power, place the main power switch Off. Identify the red keypad Stop/Reset key and the separate large red emergency shutoff. Check the electrical rating and connection requirements for the individual unit.

4. **Prepare the rider**

Make sure the rider is settled in a stable sitting position before starting. Establish the required assistance and mounting arrangements for that rider.

5. **Complete the starting checks**

Make sure, before you start, that the speed dial fully left and the emergency shutoff released. Confirm that the unit is ready before starting.

6. Please Note

- The weight limit is 250 pounds. It is advisable to let the unit cool down after 30 minutes of use when ridden near weight capacity.
- The illuminated digits represent the frequency and directly relate to the motor speed. The display may show a number less than 15.0 but the lower speed is capped at 15.
- If the display shows a fault, hold “Stop/Reset” (Red) for a moment, then “Run” (green) again. If fault not resolved or the MiraColt operates unexpectedly, stop the session. Write down any code shown on the display and contact Chariot Innovations Support before resuming use.

Controls and normal operation

Identify the controls on the keypad shown below.



Control	Function
1 - Display	Shows frequency in Hz related to motor speed. Note: this is not a Gait cycles per minute measure (that is a separate calculated measure). Note: The display may show a number less than 15.0 but the lower speed is capped at 15Hz.
2 - Speed dial	Turn right slowly to increase speed and to the left to slow down. Before starting the unit, ensure it is in the fully left starting position.
3 - Green RUN key	Starts riding motion according to the controller state. The unit has a ramp up process as it speeds up.
4 - Red STOP/RESET key	Stops the riding motion in normal use. The unit has a ramp down process until it stops.
Main On/Off switch	Controls unit power. Stop riding motion with the keypad before normal power shutdown.

Control	Function
Large red emergency shutoff	The separate emergency control. Its location differs between generations. It brings unit to abrupt and complete stop.

Stopping and troubleshooting

Normal stop and shutdown

- Press the red keypad **Stop/Reset** key to stop riding motion.
- For normal shutdown, stop the motor with that keypad key before turning the main power switch Off.
- Do not use the large red emergency shutoff or the main power switch as the routine motor-stop control. The source warns that repeated misuse can reduce electronic-component performance or life.

Emergency control

The **large red emergency shutoff** is reserved for emergencies.

You activate it by pressing/pushing it in. You release it by turning it rightward and allowing it to pop out

On Gen 3, the red emergency shutoff is low on the rear panel beside a caster. See page 6 for the Gen 3 photo and page 5 for the Gen 4 shutoff location.

If something is wrong

- **A Loose or damaged seat, handlebar, cord or guard:** do not operate until the problem is corrected with support.
- **Unusual motion, vibration or noise:** stop the session, keep the rider supported and contact Chariot Innovations. The emergency response must be appropriate to the immediate hazard.
- **Fault shown on the controller:** attempt to reset by hold “Stop/Reset” (Red) for a moment, then “Run” (green) again. If not resolved, stop session, record the displayed code and contact support.

Maintenance ,Care, Inspection and Service

To ensure your safety while servicing the MiraColt™, please strictly adhere to the following precautions:

- **Disconnect Power:** Always unplug the unit from the wall outlet before inspecting internal components or removing the back panel.
- **Avoid Moving Parts:** Never access the interior while the unit is energized. Moving parts can cause physical injury and catch loose clothing or jewelry.
- **Prevent Electric Shock:** The area behind the back panel contains live electrical wiring when plugged in. Ensure power is completely disconnected to avoid contact with charged wires.

Always prioritize safety and take all necessary precautions during maintenance checks. If you find a problem, or unsure on what to do contact Chariot Innovations Support for guidance.

Monthly external checks

- Check the seat and handlebar for a secure fit. If loose and unable to be secured, do not operate until repaired.
- Check for irregular vibration or sound during operation. Contact Chariot Innovations about abnormal conditions.
- Inspect electrical cords for damage or missing parts. Do not operate with damaged cords.

Annual care and inspection

- Remove accumulated dust and dirt with a vacuum, especially at ventilation ports.
- Check the plug, power cord and controller wire for damage.
- Check if any internal cables, belts, and pulleys display any damage.
- Inspect the mesh and seat for wear or fraying, and the handlebar and bracket for damage.
- Check the handle and bracket for damage.

Note: You can wipe down and clean the MiraColt using generally used and safe upholstery cleaning and disinfection sprays and cloths. Avoid solvents that could bleach the leather or remove paint.

Please do not attempt to make any repairs without contacting Chariot Innovations for support assistance. email: support@ChariotInnovations.com or call **+1-254-651-6497**

Videos and support

Videos supplement the approved manual; they do not replace it.

Operating overview

How to Work a MiraColt

Review of model and controller applicability is pending.

Power troubleshooting

MiraColt Won't Turn On

Read alongside the approved power and emergency-control instructions.

Shutdown troubleshooting

MiraColt Shuts Off During Use

Contact Chariot Innovations

support@chariotinnovations.com

Include the model, serial number, fitted handlebar configuration and any controller fault code. Clear photographs help identify the relevant component. Refer to Parts list regarding component parts names.

Support Number : +1-254-651-6497 or +1-254-307-2547 OPT 4

Sales Number: +1-254-224-6165

Main Office: +1-254-307-2547

Physical Address : 1620 W. Loop 340, Suite E, Woodway, TX 76712